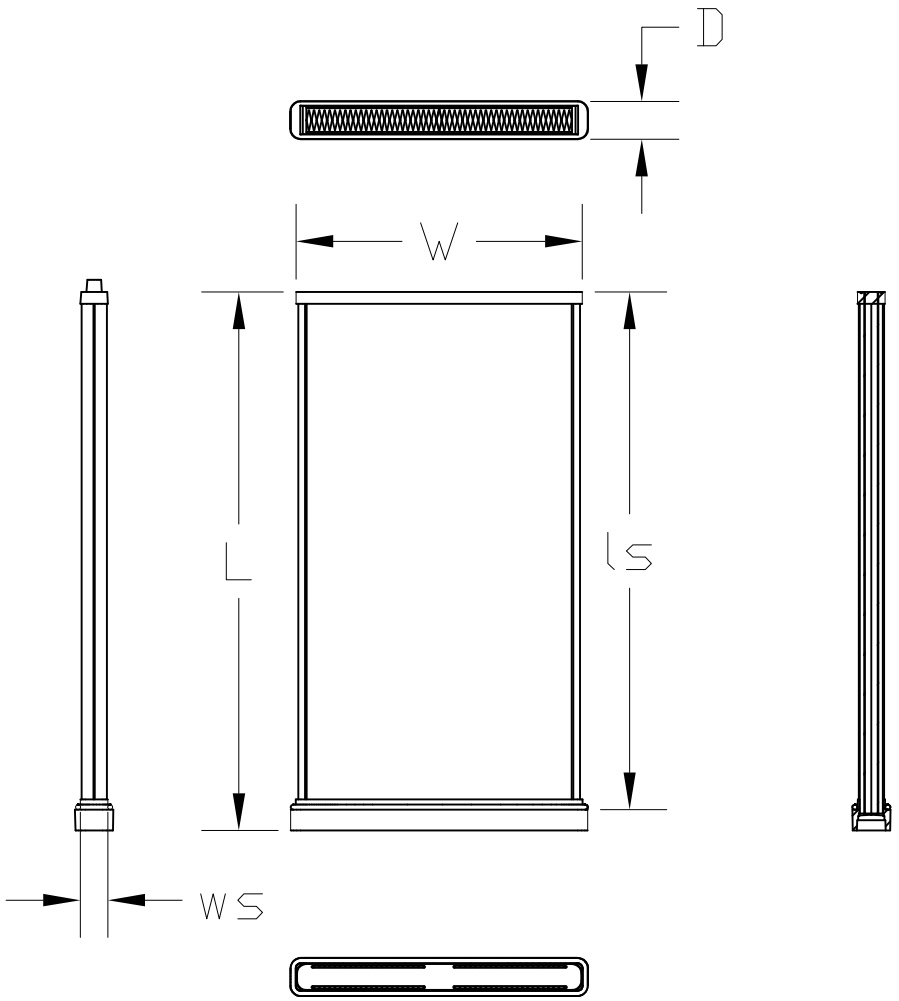

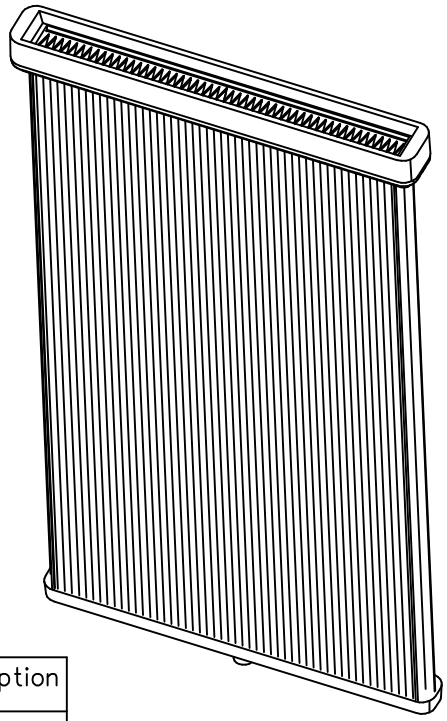

ITEM	Value	Description
W		width
L		length
D		depth
ls		slot length
ws		slot width
media type		
Additional remarks:		

◆ DENOTES SIGNIFICANT CHARACTERISTICS REF: EN 02.39.211

CAD DRAWING (HANDLING ON CAD SYSTEM ONLY)

LIMITATION:	RELEASE N °	—	TITLE: Def Panel
	PROD. DATE		
MATERIAL: N/A	EXP. N °		
kg/sqm	EXP. DATE		NUMBER:
	FIRST P.O.M.		REVISION 0
PROD. CODE: ———	DR.		
REF. N : °	CHK.	— —	SCALE: N.T.S. SHEET: 1 OF 1
USED ON: —	design app.	— —	C/C UQ;
	prod. app.		SECTIONAL SIZE / OUTLINE SIZE
DO NOT SCALE	TOLERANCES UNLESS OTHERWISE SPECIFIED: <6 ± 0,2; 6 – 30 ± 0,5; 30 – 100 ± 0,8; 100 – 300 ± 1,2; 300 – 1000 ± 2; Angles ± ,°	FIRST ANGLE PROJECTION	DESIGN CONTROL: / DRAWING LOCATION:

SIZE A3

Donaldson. Europe
3001 LEUVEN
BELGIUM
IAF

REV.	ZONE	ECO NUMBER	REVISIONS	APP.	DATE
0		–	–	–	–

All rights to manufacture, copy, reproduce or dispose of this drawing or its contents are reserved unless otherwise specified in writing by donaldson europe